Electrolux PROFESSIONAL

Modular Cooking Range Line 700XP Half Module Electric Char-Grill Top

ITEM #

MODEL #

NAME #

SIS #

AIA #



371239 (E7GREDGS0U) Half module electric Grill Top

Short Form Specification

Item No.

To be installed on open base installations, bridging supports or cantilever systems. Heating via incoloy armoured heating elements placed below the cooking plate. Cooking surface grids in enameled cast iron, easily removable for cleaning. Exterior panels in stainless steel with Scotch Brite finish. One piece pressed work top in 1.5 mm thick stainless steel. Right-angled side edges to allow flush-fitting junction between units.

Main Features

- Unit to be mounted on open base cupboards, bridging supports or cantilever systems.
- Heating via incoloy armoured heating elements below the cooking plate.
- Stainless steel high splash guards on the rear and sides of cooking surface. Splash guards can be easily removed for cleaning and are dishwasher-safe.
- Cast iron grids can be adjusted on two levels.
- Heating element can be tilted frontally for easy cleaning.
- The low temperature of the external panels allow to work in safety.
- Energy regulation through a control knob.
- Cooking grids made in highly resistant enameled cast iron for easy cleaning.
- Suitable for countertop installation.

Construction

- All exterior panels in Stainless Steel with Scotch Brite finishing.
- One piece pressed 1.5 mm work top in Stainless steel.
- Model has right-angled side edges to allow flush fitting joints between units, eliminating gaps and possible dirt traps.
- IPx4 water protection.

APPROVAL:

Included Accessories

- 1 of Scraper for free standing grills PNC 206422

Optional Accessories

- Junction sealing kit PNC 206086 ❑
- Support for bridge type installation, 800mm PNC 206137 ❑
- Support for bridge type installation, 1000mm PNC 206138 ❑
- Support for bridge type installation, 1200mm PNC 206139 ❑
- Support for bridge type installation, 1400mm PNC 206140 ❑
- Support for bridge type installation, 1600mm PNC 206141 ❑
- Support for bridge type installation, 400mm PNC 206154 ❑
- Chimney upstand, 400mm PNC 206303 ❑
- Right and left side handrails PNC 206307 ❑
- Back handrail 800 mm PNC 206308 ❑
- Chimney grid net, 400mm (700XP/900) PNC 206400 ❑
- Stainless steel grids with drain shape for free standing wide top grills (700XP) PNC 206415 ❑
- Kit height adjustment support grill grids PNC 206418 ❑
- Scraper for grids with drainage channels - top grills PNC 206421 ❑
- Scraper for free standing grills PNC 206422 ❑
- Frontal handrail, 400mm PNC 216046 ❑
- Frontal handrail, 800mm PNC 216047 ❑
- Frontal handrail, 1200mm PNC 216049 ❑
- Frontal handrail, 1600mm PNC 216050 ❑
- Large handrail - portioning shelf, 400mm PNC 216185 ❑
- Large handrail - portioning shelf, 800mm PNC 216186 ❑
- 2 side covering panels for top appliances PNC 216277 ❑

The company reserves the right to make modifications to the products without prior notice. All information correct at time of printing.

Modular Cooking Range Line 700XP Half Module Electric Char-Grill Top

Front

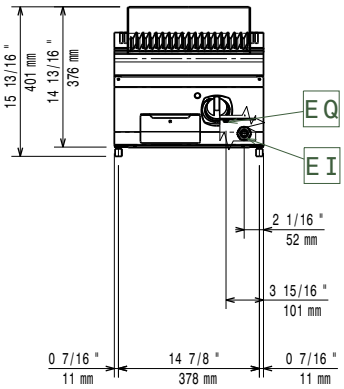

Side

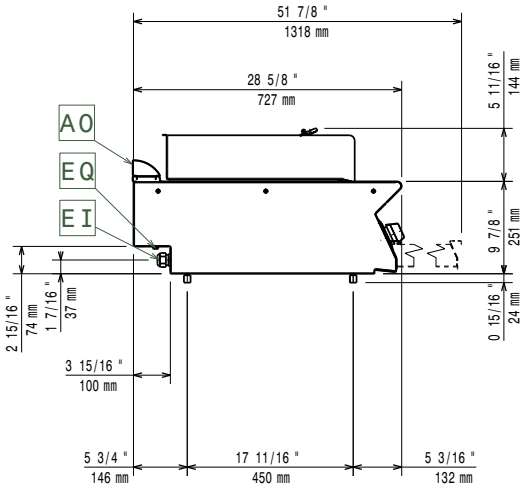

EI = Electrical inlet (power)
EQ = Equipotential screw

Top

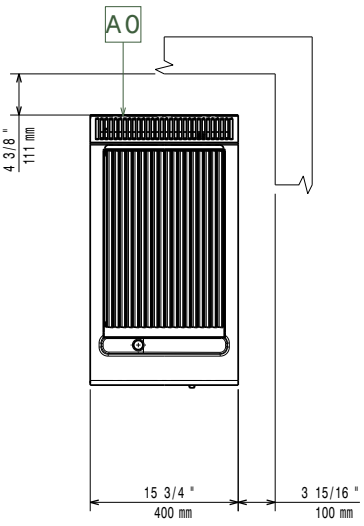

Electric

Supply voltage:	380-400 V/3N ph/50/60 Hz
Electrical power max.:	4 kW
Total Watts:	4 kW

Key Information:

If appliance is set up or next to or against temperature sensitive furniture or similar, a safety gap of approximately 150 mm should be maintained or some form of heat insulation fitted.

Net weight:	32 kg
Shipping weight:	41 kg
Shipping height:	530 mm
Shipping width:	460 mm
Shipping depth:	820 mm
Shipping volume:	0.2 m³
[NOT TRANSLATED]	N7GE

The company reserves the right to make modifications to the products without prior notice. All information correct at time of printing.

2026.11.19